©Copyright Xandex Inc., All Rights Reserved.
The information disclosed herein is deemed to be confidential, proprietary, and a trade secret of Xandex, Inc. This information may not be used, reproduced or disclosed without the express prior written consent of Xandex, Inc.

REVISIONS					
REV	DESCRIPTION	CHANGE NUMBER	BY	DATE	APPROVED
C	UPDATE TITLE BLOCK	4366	MRW	12/04/17	

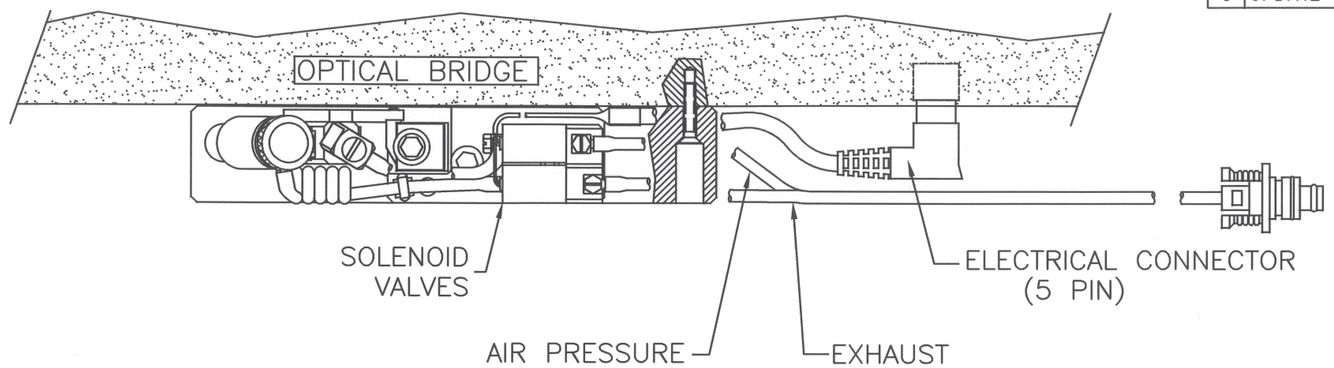

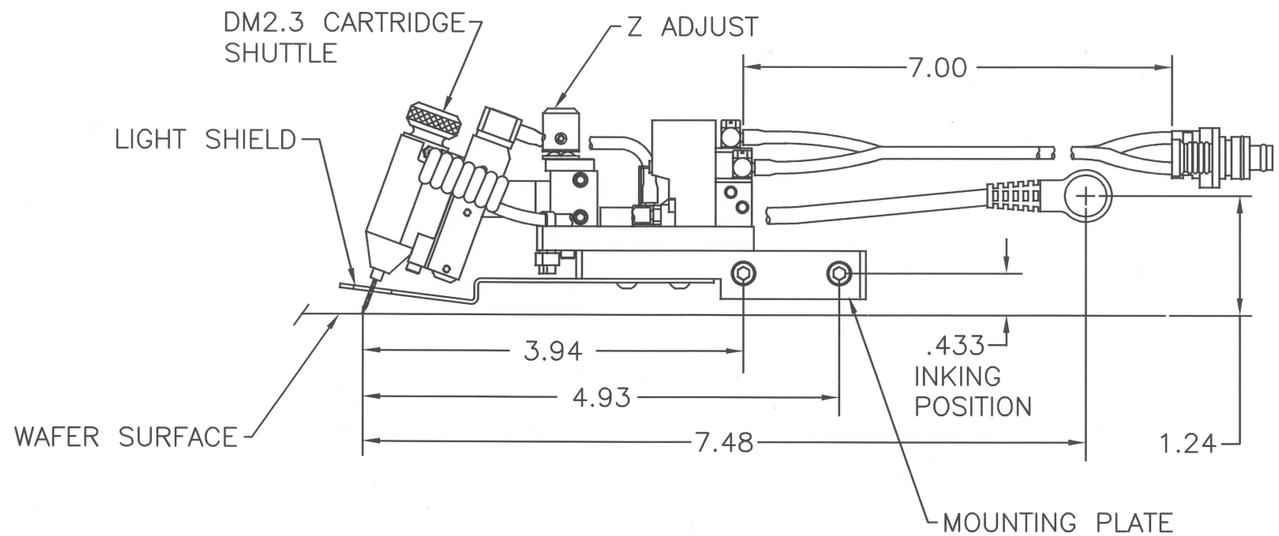

NOTES:

1. INKER IS FOR USE ON TEL P8 SERIES PROBERS.
2. INKER INSTALLS ON PROBER OPTICAL BRIDGE.
3. RETROFIT KIT IS REQUIRED, CONTACT TOKYO ELECTRON FOR FURTHER INFORMATION.
4. INKER USES DM2.3 CARTRIDGE.
5. SHUTTLE TRAVELS .050 FROM POSITION SHOWN TO DEPOSIT INK ON WAFER, INKER IS SHOWN IN NOMINAL INKING POSITION WITH Z ADJUSTMENT CAPABILITY OF ±.100.
6. INKER HAS NO X–Y ADJUSTMENT CAPABILITY.
7. ORDER INKER KIT PART NUMBER 340–5210.

APPROVALS	DATE
DRAWN JMc	10/30/96
CHECKED	12/7/17
ENGRG D. TEGLIA	10/30/96
NEXT ASSEMBLIES.....USED ON	

ITEM	QTY	PART NUMBER

INTERPRET DRAWING PER ASME Y14.5M–1994

TOLERANCES UNLESS OTHERWISE SPECIFIED

DIMENSIONS ARE IN INCHES

DECIMALS
1 PL ± FRACTIONS ±
2 PL ±.010 ANGLES ±1°
3 PL ±.005
4 PL ± 63 ALL SURFACES

DESCRIPTION

XANDEX INC.
1360 REDWWOD WAY, SUITE A
PETALUMA, CA 94954
(707) 763 7799

TITLE PNEUMATIC INKER, TEL P8 OPTICAL BRIDGE

DO NOT SCALE DRAWING

SIZE	SCALE	SHEET	DRAWING NUMBER	REV
C	1/1	1 OF 1	900–5210	C